Component List

CL-i4s Rev C.

PRO SPOT

ORDER ONLINE @ store.prospot.com



i4s Serial #

Checked by:

SHIPPING DATA:
Dimensions: 48" X 40" X 60"
Weight: 385 lb (175 kg)

PS-3201-3
Single-Sided Gun Assembly



CLP-70
Spot Hammer



SA-0612
Tool Balancer 8-10kg

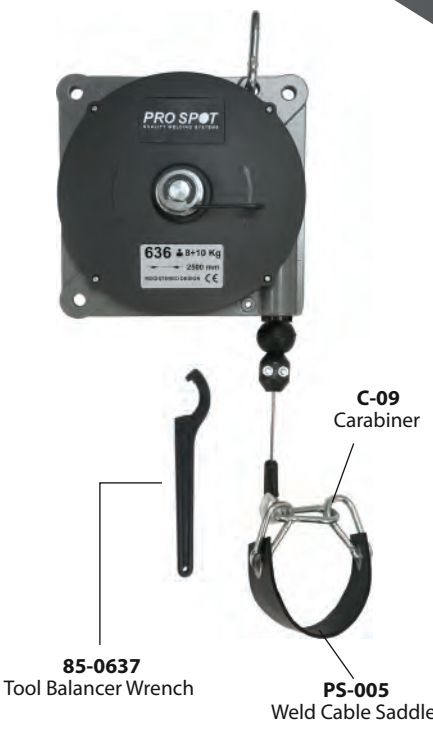

PS-700W
Spot Welding Gun, Liquid Cooled

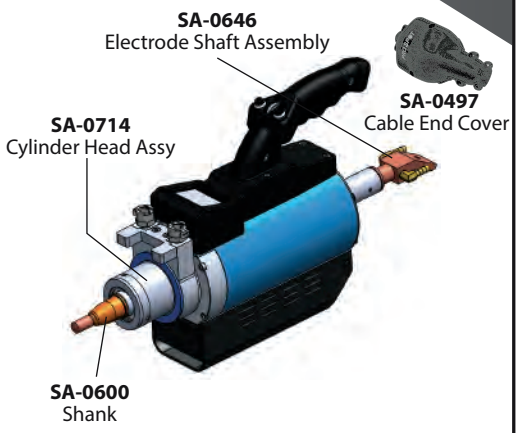

80-0001
Welder Cover



SA-0642
Overhead Boom



PSW-080
C-Arm Assembly, 80mm Extension

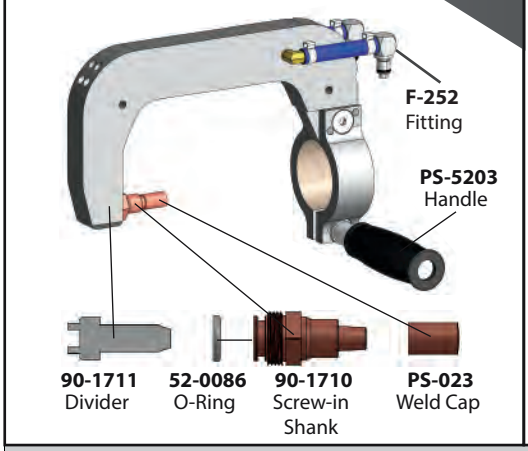

PSW-WH-090
Wheelhouse Arm, 90mm Depth

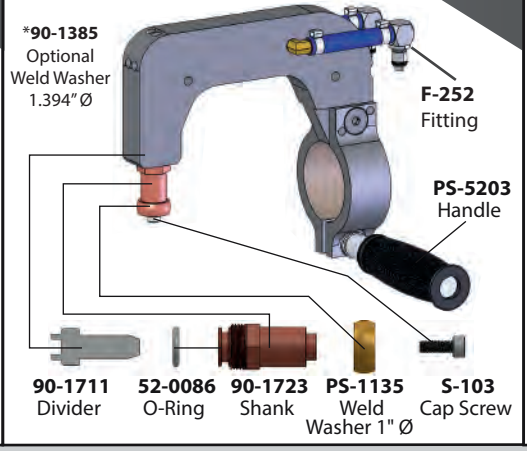

PSW-520
Extension Arm, 520mm Depth



Copyright 2026 Pro Spot International Inc.