04

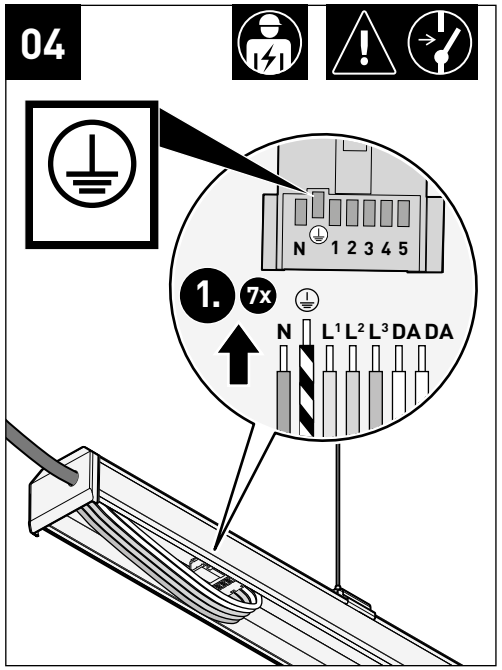

04

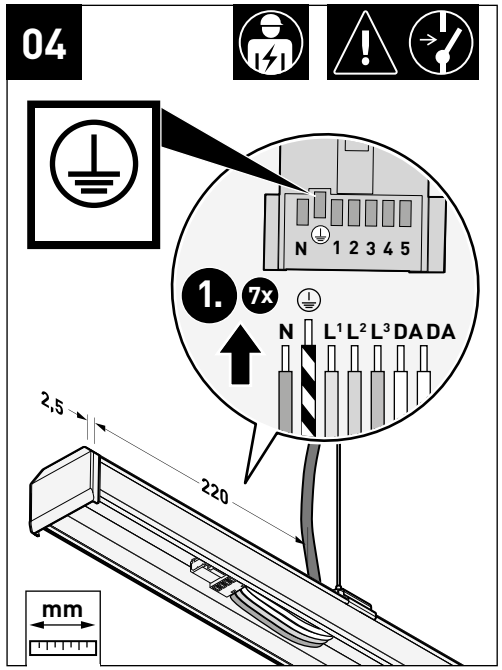

i + optional

	Type	TOC
	07690 VS	68 223 00
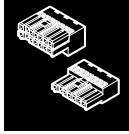	07690 VV	21 973 00

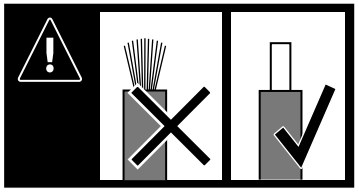

i + optional

	Type	TOC
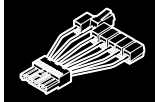	07690 VS 2,5□ L100	68 221 00
	07690/1LV 2,5□ L300	68 222 00

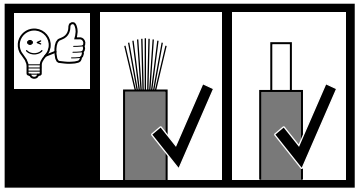

10184224 | 261014 | © trilux.com

05

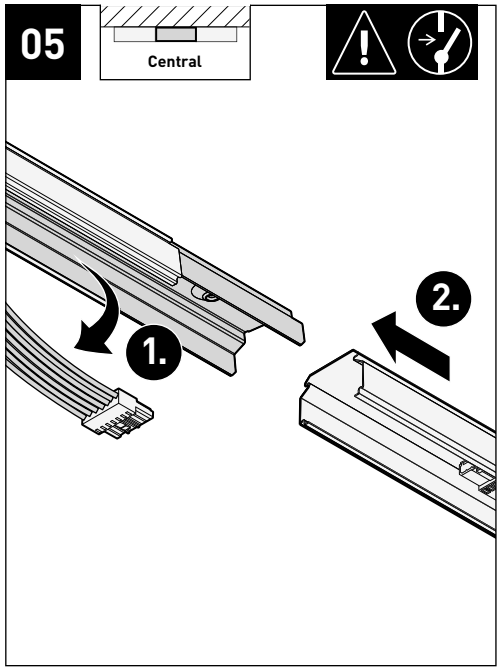

i

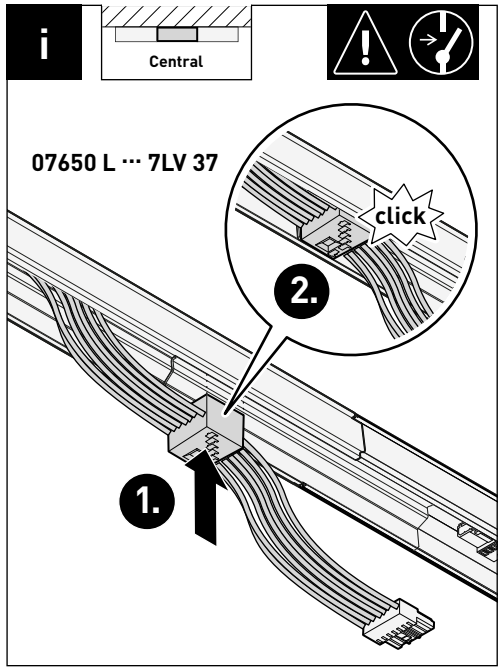

06

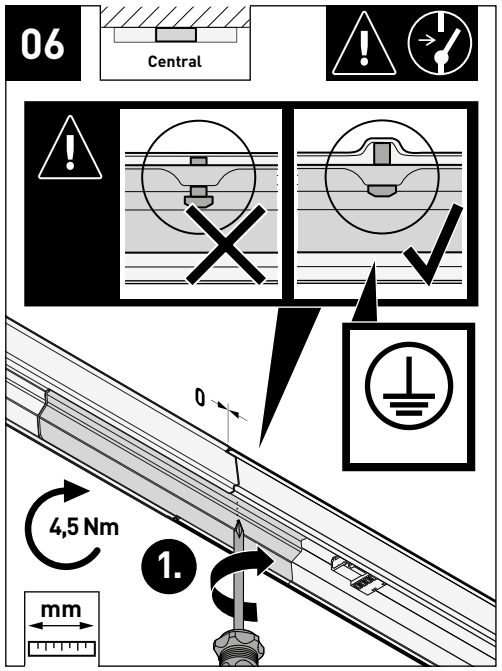

07

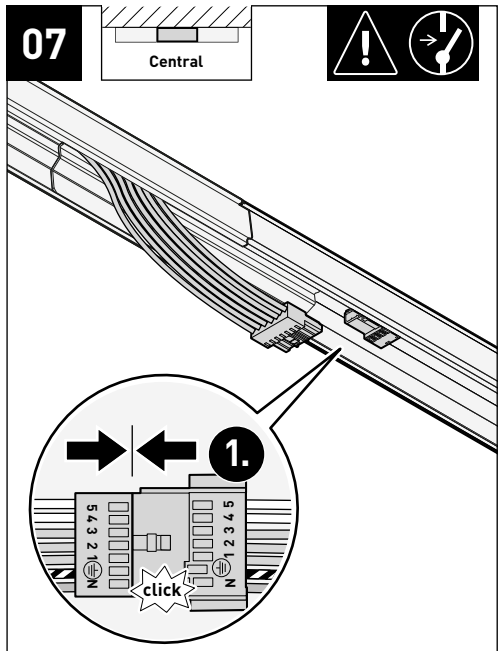

© trilux.com | 261014 | 10184224