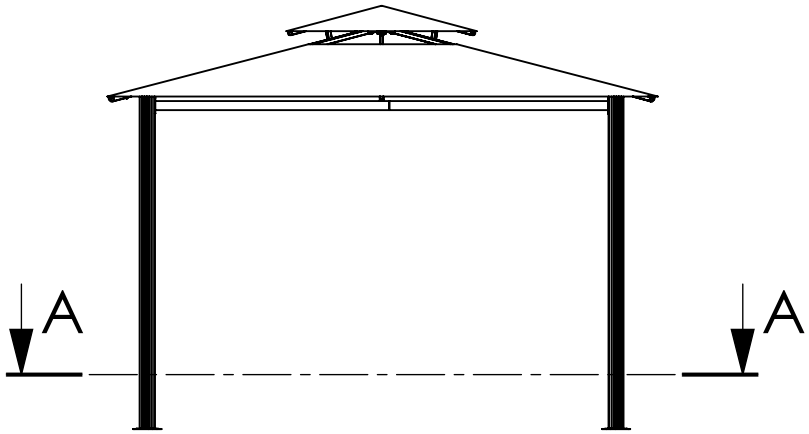
A
A

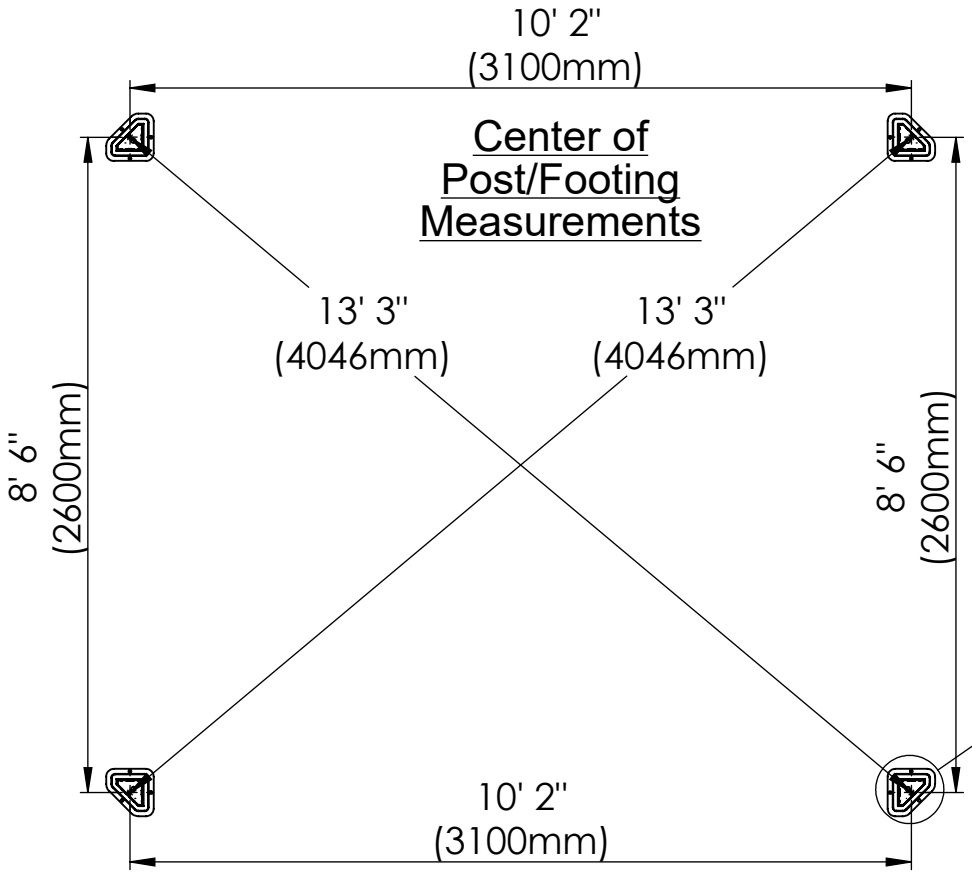
10' 2"
(3100mm)
Center of
Post/Footing
Measurements
13' 3"
(4046mm)
13' 3"
(4046mm)
8' 6"
(2600mm)
8' 6"
(2600mm)
10' 2"
(3100mm)

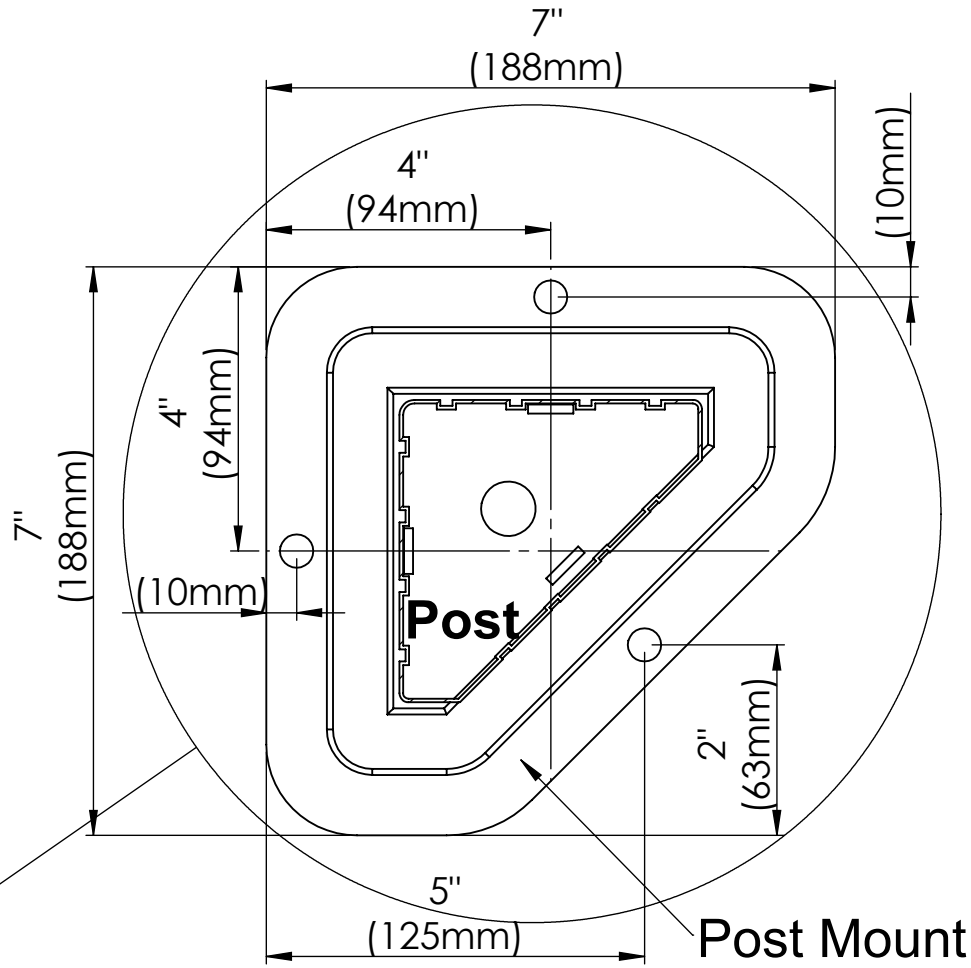
7"
(188mm)
4"
(94mm)
(10mm)
4"
(94mm)
7"
(188mm)
(10mm)
Post
2"
(63mm)
5"
(125mm)
Post Mount

Post Detail