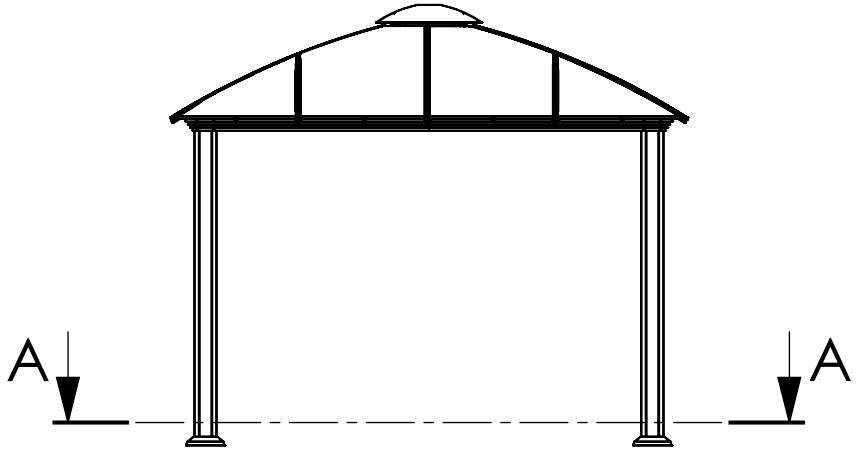

Paragon Outdoor
WWW.PARAGON-OUTDOOR.COM

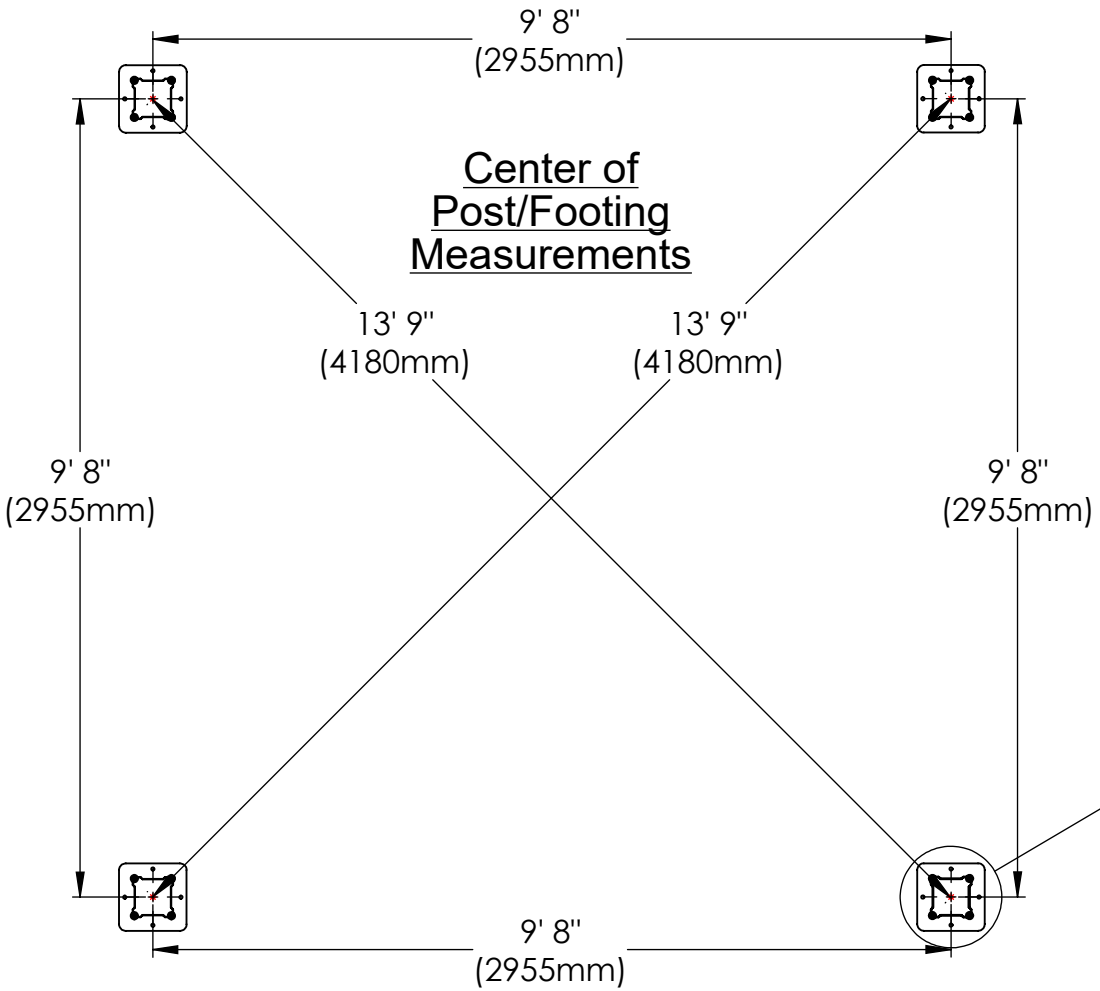

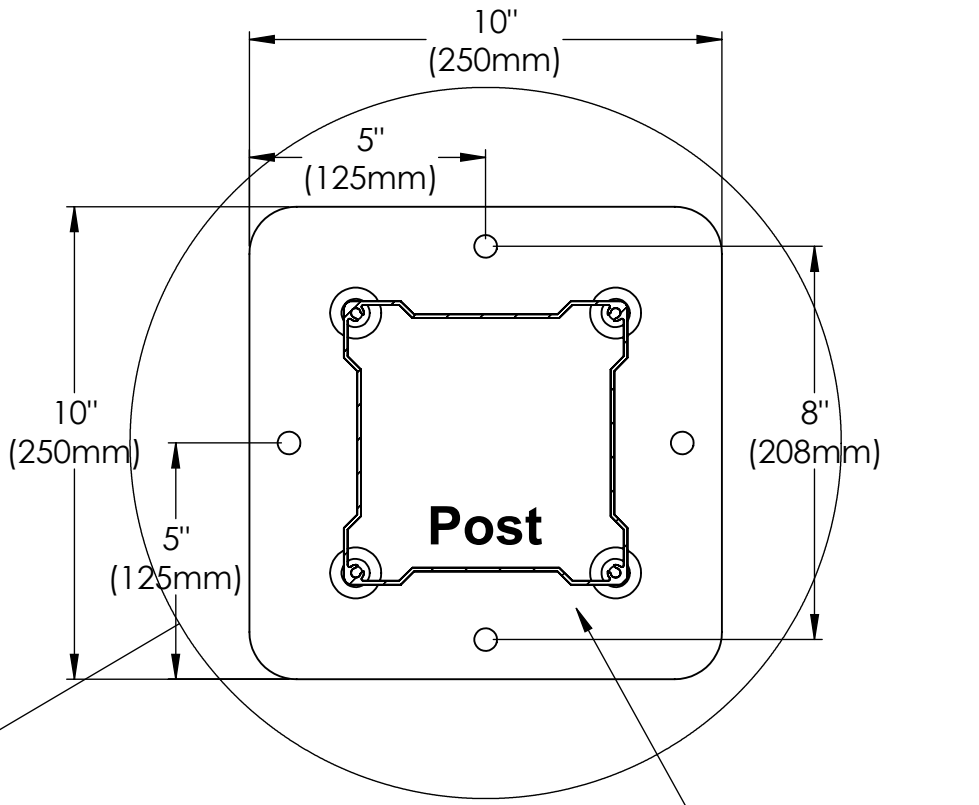

Post Detail