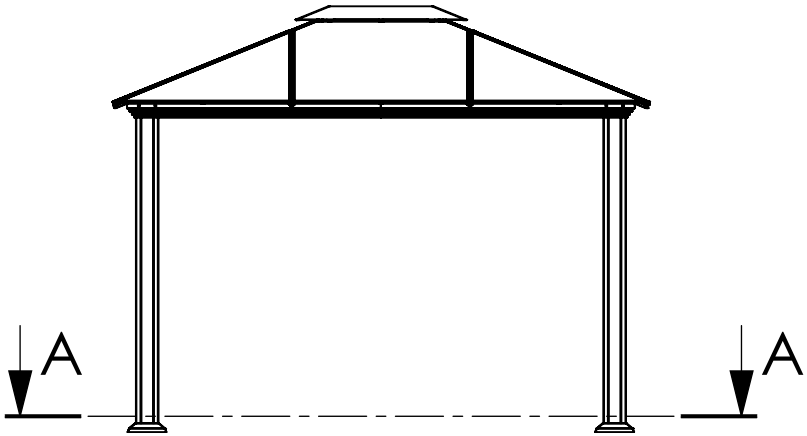
A
A

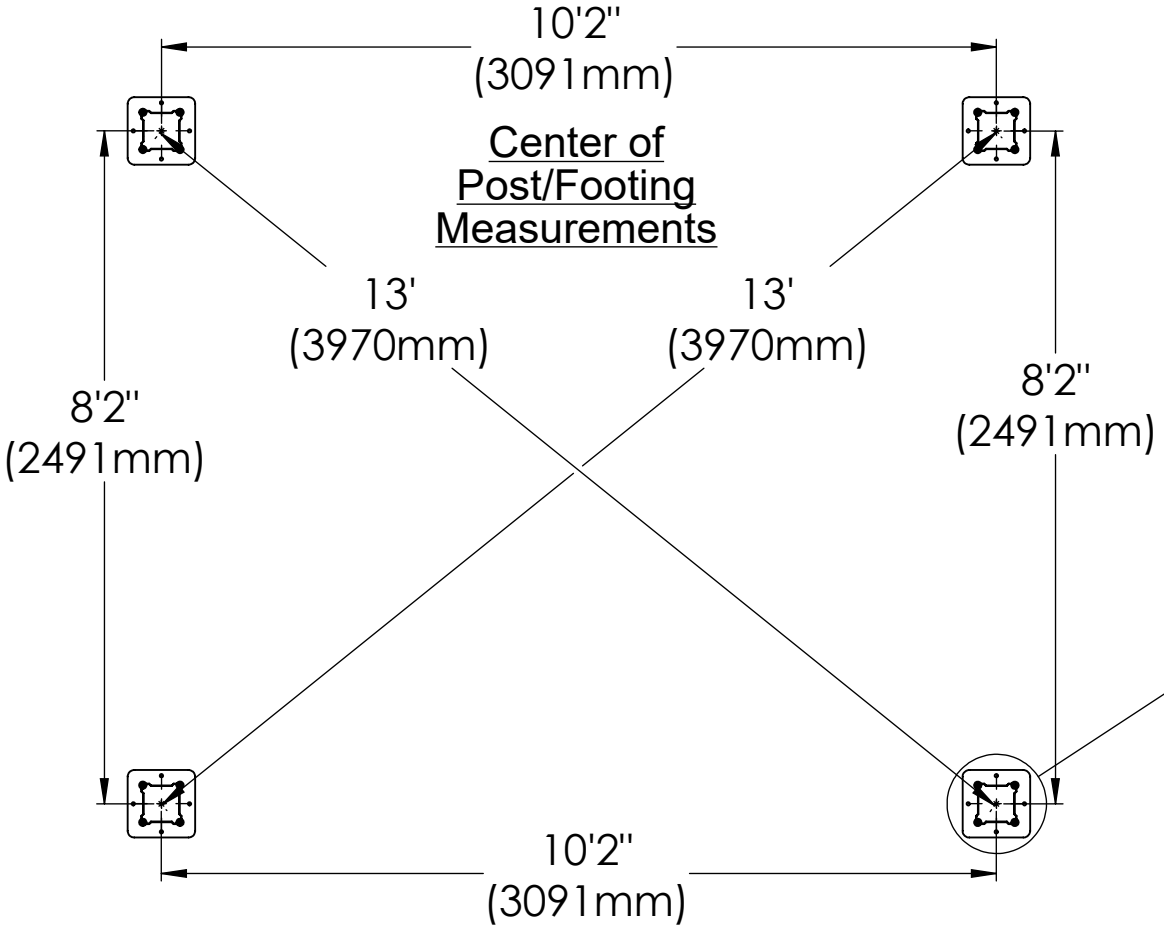
10'2"
(3091mm)
Center of
Post/Footing
Measurements
13'
(3970mm)
13'
(3970mm)
8'2"
(2491mm)
8'2"
(2491mm)
10'2"
(3091mm)

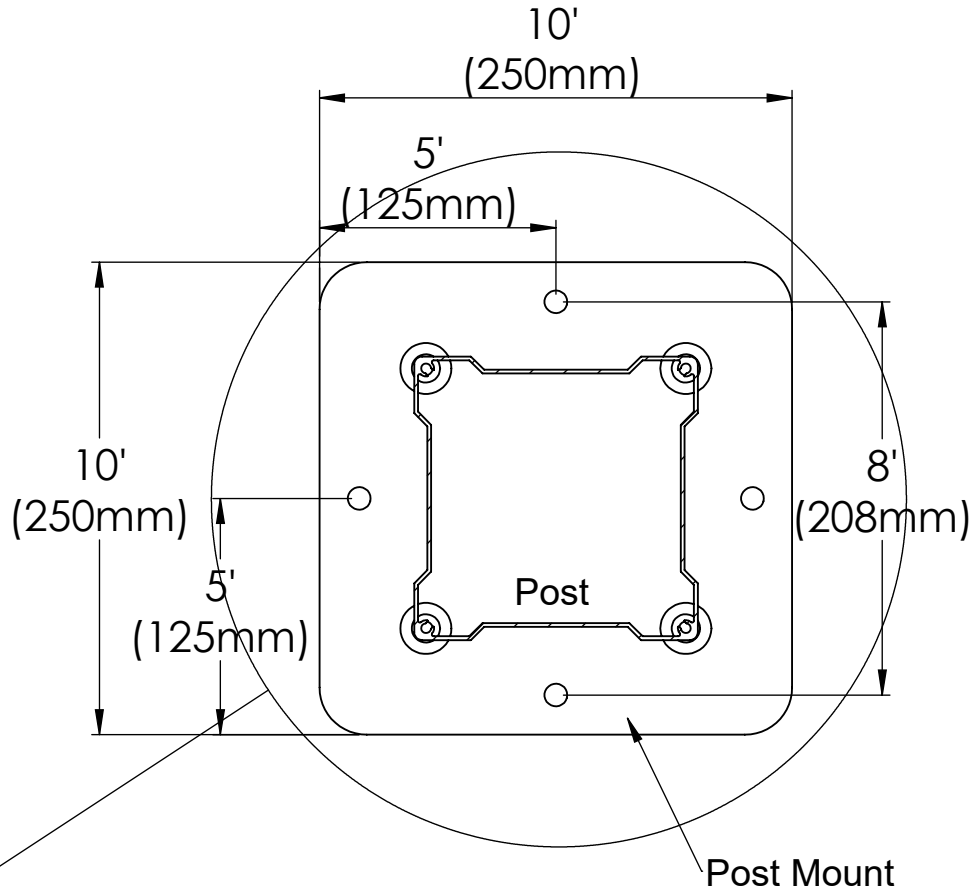
10'
(250mm)
5'
(125mm)
10'
(250mm)
5'
(125mm)
8'
(208mm)
Post
Post Mount

Post Detail