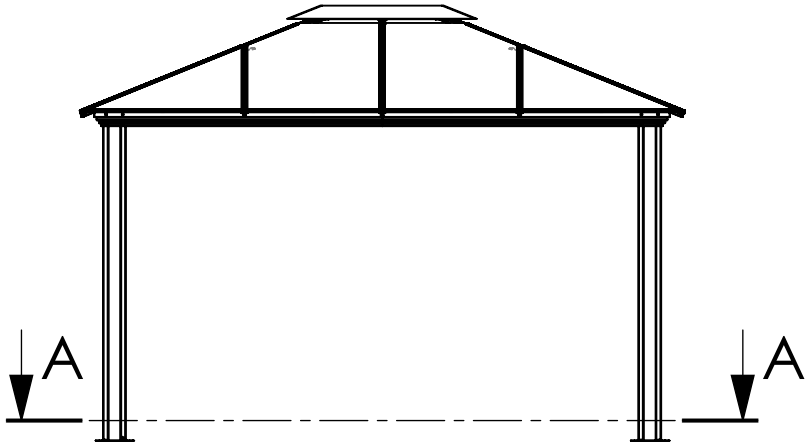
A
A

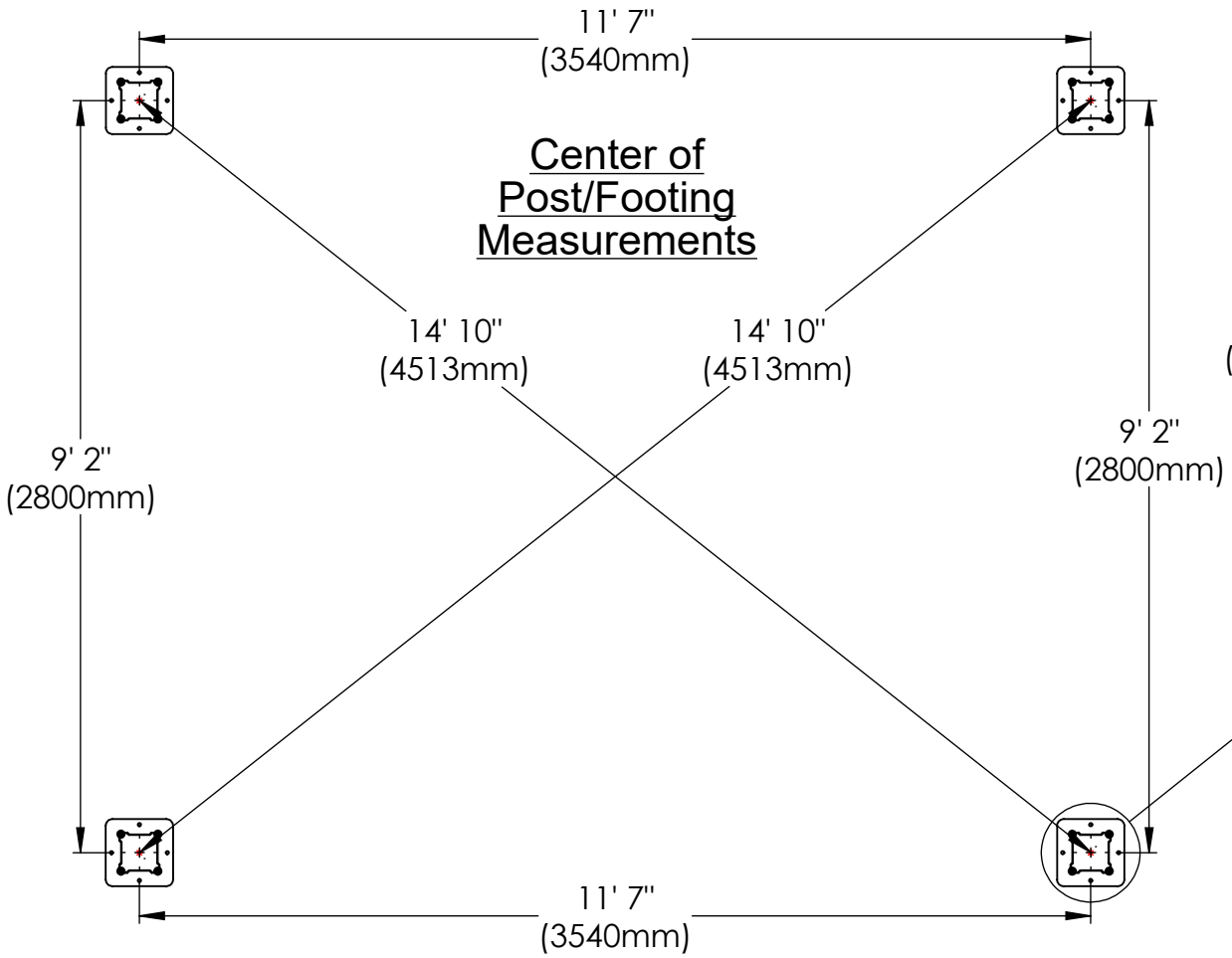
11' 7"
(3540mm)
Center of
Post/Footing
Measurements
14' 10"
(4513mm)
14' 10"
(4513mm)
9' 2"
(2800mm)
9' 2"
(2800mm)
11' 7"
(3540mm)

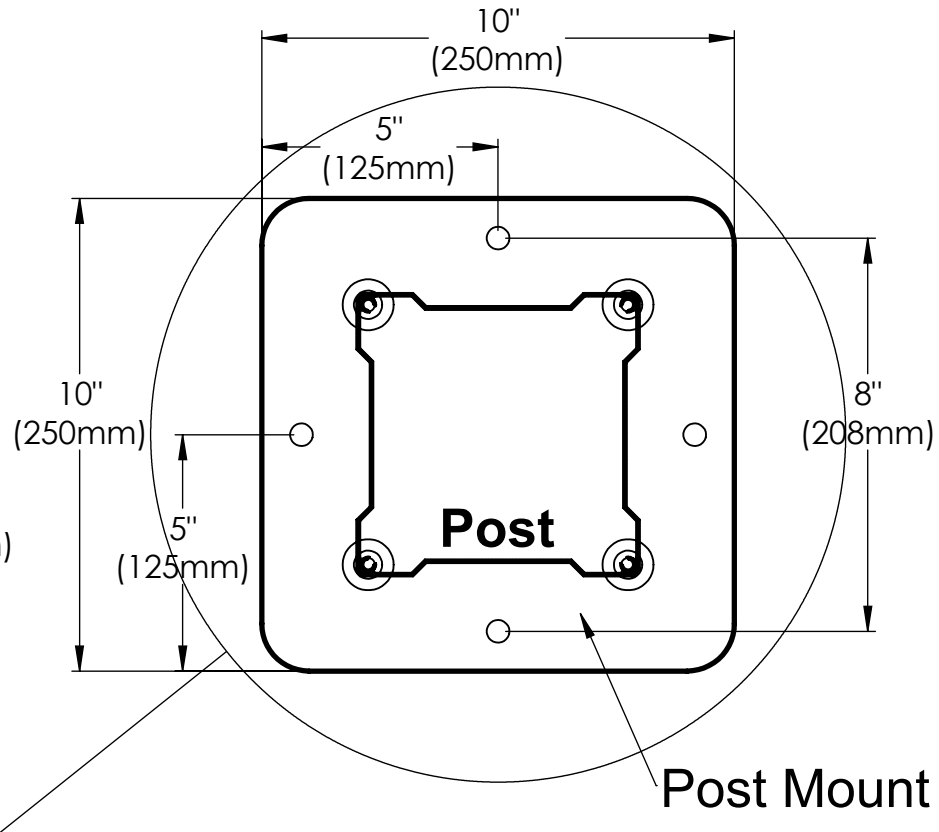
10"
(250mm)
5"
(125mm)
10"
(250mm)
8"
(208mm)
5"
(125mm)
Post
Post Mount

Post Detail