Electronic Blade Micrometers 50-840-Series

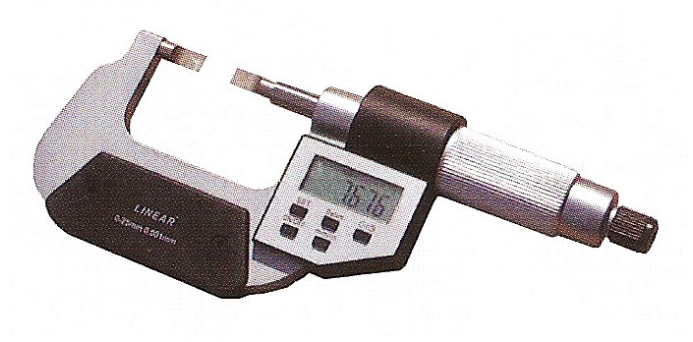

Protection: IP 54 Splash Proof
DIN 863/1
Clear LCD Display
Metric/Inch Conversion
Tolerance, Relative & Absolute Modes
Resolution 0.001mm/0.0005”
Tungsten Carbide Blade Tips
Blade Anvils: 0.75mm wide x 6mm high x 7mm long
Satin Chrome Frame and Thimble
Friction Thimble with Ratchet End Knob
Spindle Lock Lever
Plastic Heat Guard
Setting Rod supplied with models over 25mm/1”
Supplied in fitted case

Packed Weight and Dimensions

Code	Description	Weight g	W mm	H mm	L mm
50-840-001	Electronic Blade Micrometer 0-25mm / 0 -1”	610	115	45	223
50-840-002	Electronic Blade Micrometer 25-50mm / 1-2”	770	140	45	253
50-840-003	Electronic Blade Micrometer 50-75mm / 2-3”	1300	170	45	302

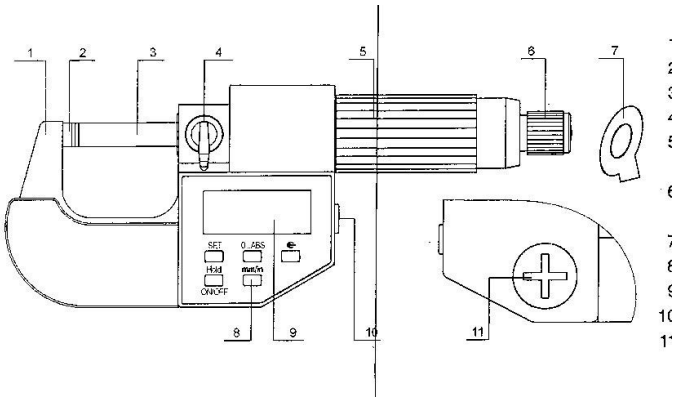

1 Frame
2 Anvil
3 Spindle
4 Locking Lever
5 Friction Thimble
6 Ratchet Stop
7 Battery Cover Tool
8 Keys
9 LCD Display
10 Output Port
11 Battery Cap

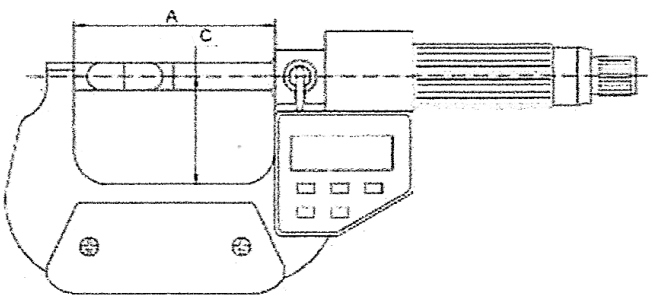

Code	Range mm/1nch	A mm	C mm	Accuracy mm
50-840-001	0-25	57	32	0.004
50-840-002	25-50	82	44.5	0.004

Power: 1 x SR44: 1.5V battery

Buttons:

SET	Sets origin data for absolute measurement
O...ABS	Selects INC or ABS
O	Data Output
ON/OFF / Hold	Power on or off
Mm/in	Selects mm or in

In	:	Inch Mode
INC	:	Relative Measuring
ABS	:	Absolute Measuring
	:	Battery Voltage is Low
O	:	Data Output
Set	:	Set the Origin
Hold	:	Display value Held

Operation:

There are 2 ways of pressing the micrometer buttons used in the following instructions
Press and release immediately = (P & Rel) or Press for 2 seconds and release = (P + 2 sec)

Button Functions:

Hold & ON/OFF Button

ON/OFF:	(P + 2 sec)	Power on/off
Hold:	(P & Rel)	Holds the displayed value
SET:	(P & Rel)	Sets the origin

O-ABS Button

O:	(P & Rel)	Sets display to zero, enter relative measuring mode
ABS:	(P + 2 sec)	Selects Absolute measuring mode

Mm/in: (P & Rel) Selects Metric or Inch resolution

Clock: Not avail Data output

Set the Origin:

Press SET button, “Set” flashes and the origin is displayed
Press SET button again, “Set” disappears and the displayed value is set to the Origin
Rotating the spindle will not change the origin when “Set” is flashing

Adjust the Origin:

Rotate the thimble until the desired value is displayed. Press Hold button (P & Rel) to hold this value
Press SET button, “Set” flashes and the displayed value is stored as the origin
Press SER button again, “Set” disappears and this value is set to the Origin
Rotating the spindle will not change the origin when “Set” is flashing
The Origin will return to the factory setting following removal and replacement of the battery

Electronic Blade Micrometers 50-840-Series

Specifications:

Measuring Force:	5 – 10N
Power Consumption:	Greater than 35 milliamps
Operating Temperature:	0 – 40 deg.C
Storage Temperature:	-20 to 60 deg. C
Protection Class:	IP54 (resistant to water splash)

Operating Care

Clean measuring faces with a clean soft cloth only
Do not use any organic solvent for cleaning such as acetone etc.
Keep instrument away from strong magnetic fields and high voltage environments which can affect the correct working of the electronic pack
Prevent the ingress of oil and liquids into the electronics
Do not use or store the micrometer in direct sunlight, or in an excessively hot or cold environment
Remove battery if the instrument is not to be used for a long period of time
Do not disassemble or drop the instrument

Do not mark the instrument by engraving, etching or any other permanent method of marking as this will invalidate the warranty

Fault Finding

Failure	Causes	Remedy
Display: “E 1” Display: “Exxxxx”	Measured value is over display range	Reset the origin or change to relative mode
Display: “E 2”	The origin is too great	Reset the origin
Display: “E 3” Display: “E 8”	1 The micrometer is disturbed 2 Something wrong with sensor	1 Reset the battery 2 return the micrometer for repair
Measured value is not correct	1 Measuring surfaces are not clean 2 The origin is incorrect	1 Clean measuring surfaces 2 Reset the origin
Display is confused or dead	Strong disturbance to micrometer	Reset battery
No display Display is blurring Battery sign appears	Battery voltage below 1.45V	Replace battery